Matsuura

URL : http://www.matsuura.co.jp/
E-MAIL : webmaster@matsuura.co.jp

MATSUURA MACHINERY CORPORATION
1-1 Urushihara-cho Fukui City 910-8530, Japan
TEL : +81-776-56-8106 FAX : +81-776-56-8151

MATSUURA EUROPE GmbH
Berta-Cramer-Ring21
D65205 Wiesbaden-Delkenheim, Germany
TEL : +49-6122-7803-80 FAX : +49-6122-7803-33
E-MAIL : meg@matsuura.de
URL : http://www.matsuura.de/

MATSUURA MACHINERY PLC
Beaumont Center Whitwick Business Park, Coalville Leicestershire
LE67 4NH, England
TEL : +44-1530-511-400 FAX : +44-1530-511-440
E-MAIL : postmaster@matsuura.co.uk
URL : www.matsuura.co.uk

MATSUURA MACHINERY GmbH
Berta-Cramer-Ring21
D65205 Wiesbaden-Delkenheim, Germany
TEL : +49-6122-7803-0 FAX : +49-6122-7803-33
E-MAIL : info@matsuura.de
URL : http://www.matsuura.de/

ELLIOTT MATSUURA CANADA INC.
2120 Buckingham Road Oakville Ontario L6H 5X2, Canada
TEL : +1-905-829-2211 FAX : +1-905-829-5600
E-MAIL : postmaster@elliottmachinery.com
URL : http://www.elliottmachinery.com/

MMTS CORPORATION
65 Union Avenue Suite2, Sudbury Massachusetts 01776, U.S.A.
TEL : +1-978-443-5388 FAX : +1-978-443-9524

- Product specifications and dimensions are subject to change without prior notice.
- The photos may show optional accessories.

Products are subject to all applicable export control laws and regulations.

DA-E5.1 201104 2000 S

Matsuura

5-Axis Vertical Machining Center

MAM72-3VS

MAM72-35V

MAM72-3VS

MAM72-35V

MAXIA

Innovation by Matsuura

Matsuura MAM72-3VS

Spanning the Boundaries of Time - a

Renewal! Improved Feedrate and Operability

- X/Y/Z-Axis Feedrate 60/60/50m/min
- Operator support software「MIMS」is standard
- Improved operability with renewed ATC&APC operator panel

One Set up Process Machining

- With just one set up, full 5 face machining is achievable.
- Vastly reduced fixturing costs, reduced fixture exchange & work setting time.

Long Hours of Unmanned Production

- Matsuura's proven tool & pallet storage & management technology assures reliable unmanned running.

High Speed High Precision Machining

- High Speed Spindle - designed & built in-house at Matsuura, the pioneers of High Speed Spindles.
- Highly accurate & efficient High Speed Machining.
- Extremely robust & rigid design & construction.

User Friendly - By Design *Matsuura G-Tech 30i*

- Ergonomically designed, user friendly control - for ultimate safety & handling.
- Minimum machine footprint - maximum accessibility.
- Long life grease lubricated spindle & axis feeds.

l MAM72-35V

Rare & Precious Investment

MAM72-35V

High Productivity Solution for 5-Axis Components up to ø350mm

MAM72-3VS

Compact 16 m^2 (171 ft^2) Floor Space, 40 Pallets & Max. 240 tools




MAXIA
Innovation by Matsuura

Highly Rigid Construction

The Combined Casting Assembly Weighs in Excess of 6 Tonnes

- Rigidity of the bed and base column assembly is critical to the attainment of accuracy and long term reliability, not just in heavy duty machining applications but equally so in high speed too. From the ground up, the extent to which Matsuura's designers have gone to achieve the ultimate 5-axis machining solution is readily apparent.
- Weighing a massive 3.1 tonnes, the one piece base casting provides a solid and firm foundation upon which all the critical machine elements are assembled while in turn providing excellent damping properties and long life machine accuracy.
- By utilising a bridge-type casting, spindle overhang is minimal thus allowing maximum use to be made of the available cutting forces.

Clean, Reliable & Very Effective

- Lubrication is via the long-life grease packs which are an integral part of both the linear guides and ballscrews - clean, reliable and extremely effective.
- Further enhancing component quality are the large, extremely high precision, 40 mm (1.57 in.) diameter by 12 mm (0.47 in.) pitch ballscrews, pre-loaded to optimum levels, which contribute to the sustained achievement of ± 0.002 mm (0.000078 in.) positioning accuracy and ± 0.001 mm (0.000039 in.) repeatability as actual results, throughout the long life of the machine.

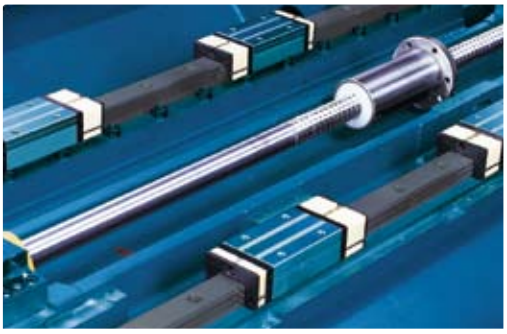

Rapid Traverse Rate (X/Y/Z)	60,000/60,000/50,000 m/min (2,362.2/2,362.2/1,968.5 ipm)
Feedrate (X/Y/Z)	60,000/60,000/50,000 m/min (2,362.2/2,362.2/1,968.5 ipm)

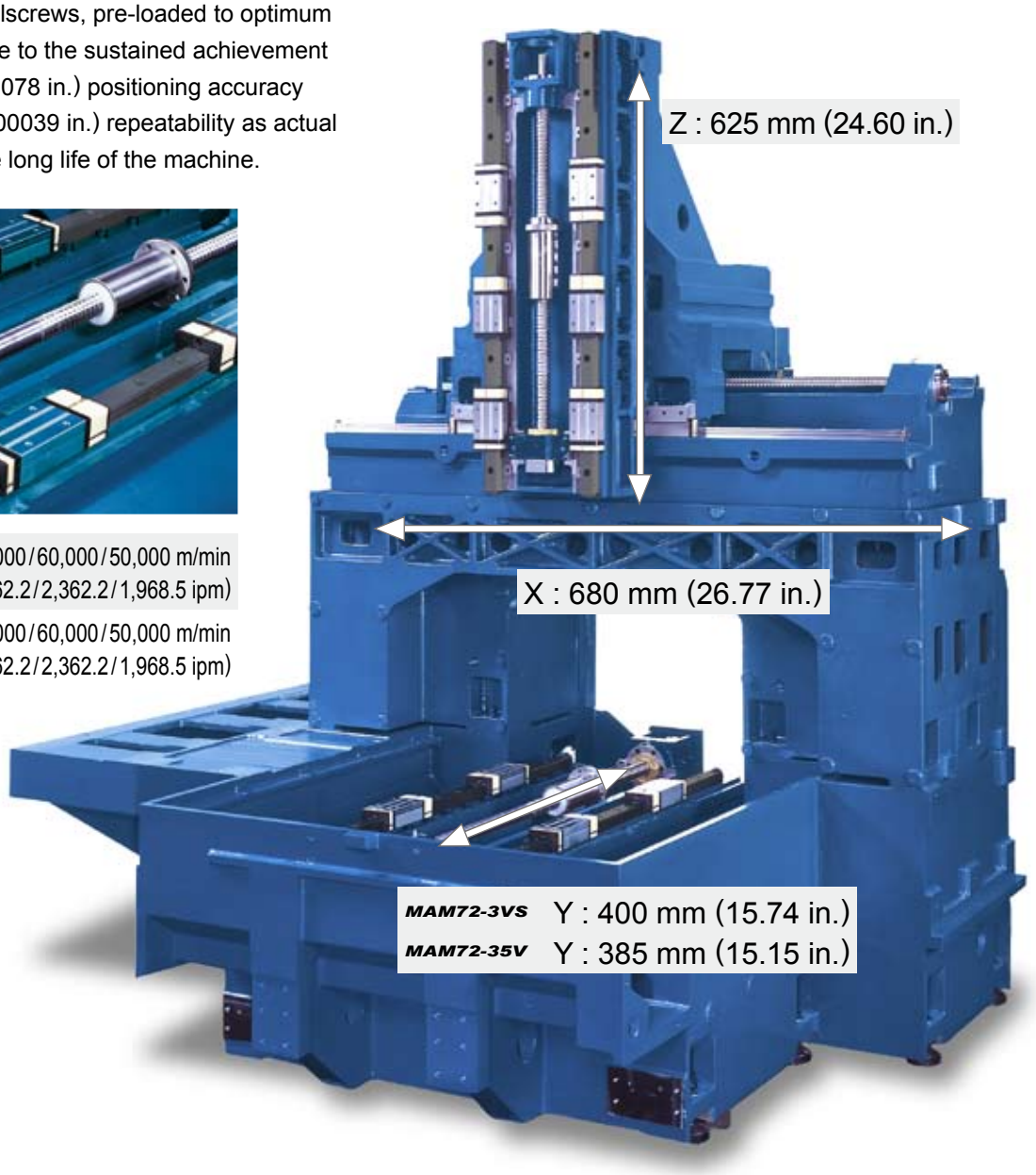

Powerful Tilt & Rotary Table

- The tilt & rotary table has twin side supports for maximum rigidity, with powerful braking torques for tilt axis cutting.
- B & C axis scales are equipped as standard.
- High speed tilting & rotating reduce the cycle time.

Acceptable Cutting Torque (B/C)	760 / 760 N·m
Breaking Torque (B/C)	2,450 / 1,470 N·m
Pallet Indexing Accuracy (B/C)	5 sec.
Pallet Indexing Repeatability	± 2 sec.
Indexing Angle (B/C)	0.001 deg
Pallet Indexing Time (B) without clamping/unclamping time	1.46 sec./90º 0.68 sec./90º
Pallet Indexing Time (C) without clamping/unclamping time	1.47 sec./180º 0.69 sec./180º

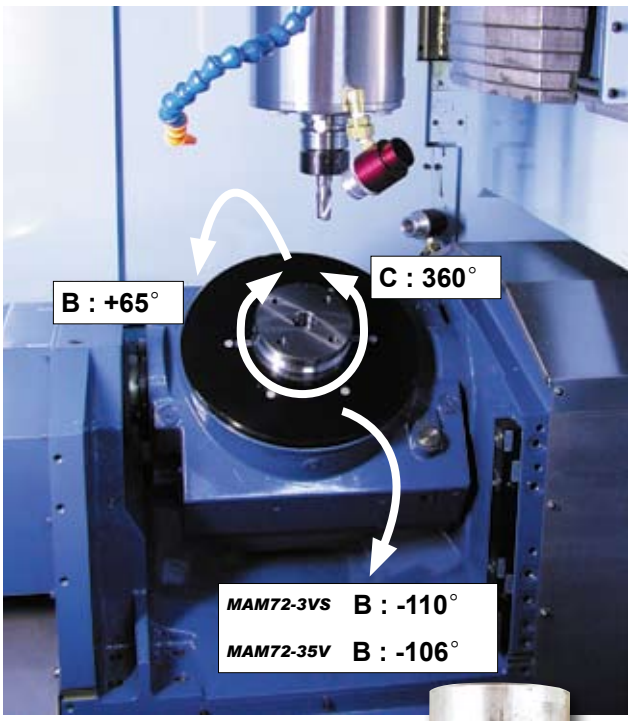

Double Face Contact

- Using Matsuura's unique and patented pallet design, pallets are clamped to a force of 22.5 kN, again contributing considerably to the machine's overall cutting capability.

Excellent Swarf Management System

- By utilizing a directional & powerful air blow outlet near to the spindle, and a coolant flush system in the roof of the total enclosure, swarf chips are quickly & efficiently disposed.
- Designed with steep slopes & no swarf traps, the enclosure stays free of contamination.
- Draining / Transporting / Collecting swarf is achieved smoothly & efficiently by use of the following:

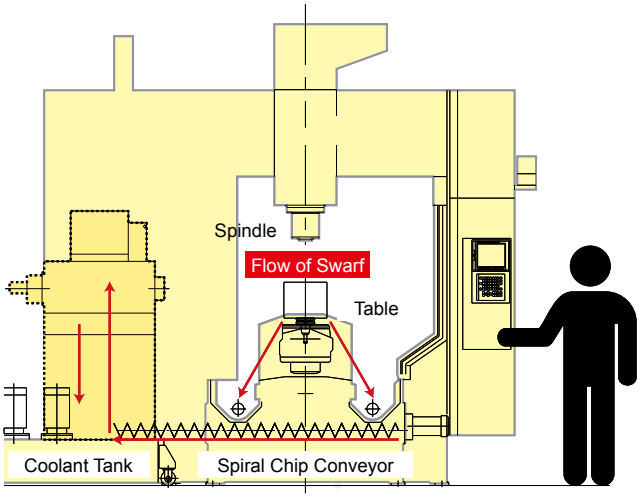

Coolant Tank Oil Capacity	600 L

*Please contact Matsuura in case of using the oily coolant.

Chip Flush System

Drum Filter for the Lift-up Chip Conveyor

Matsuura Hi-Tech Spindle

Flexible, Versatile, Powerful & Configurable to Your Needs

- Matsuura's patented, in-house designed and manufactured Hi-Tech spindle has been acclaimed throughout the world for its outstanding performance and reliability.
- Directly driven and running on grease lubricated ceramic bearings, the ***MAM72-3VS/35V*** machine spindle offers 12,000 min^{-1} as standard with a useful 167 Nm of torque available up to 630 min^{-1}. Its suitability for the machining of a wide range of materials, from aluminium and steel to the direct cutting of hard metals is thereby assured.
- Naturally, for more dedicated applications, such as when machining only aluminium or other soft alloys, the ***MAM72-3VS/35V*** machine can be configured with spindle speeds to match your requirements precisely. These options range from 8,000 min^{-1} for heavier duty applications up to 20,000 min^{-1} for more dedicated high speed work.

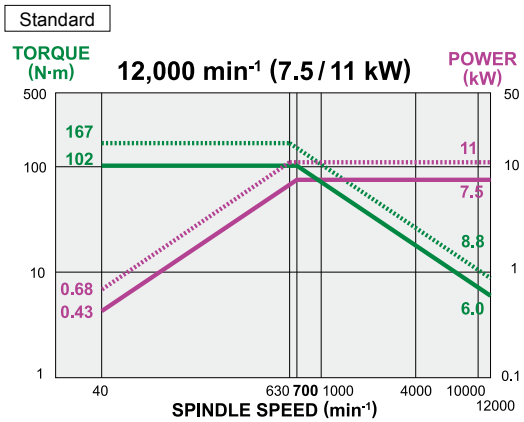

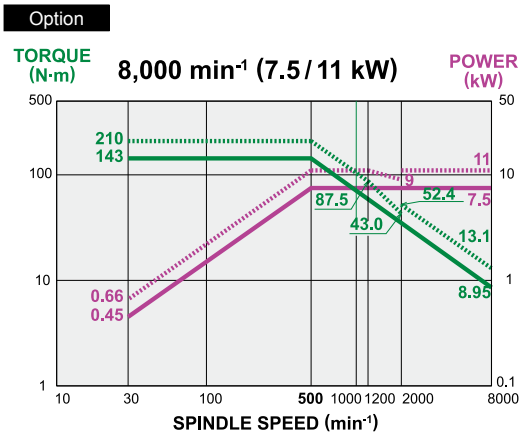

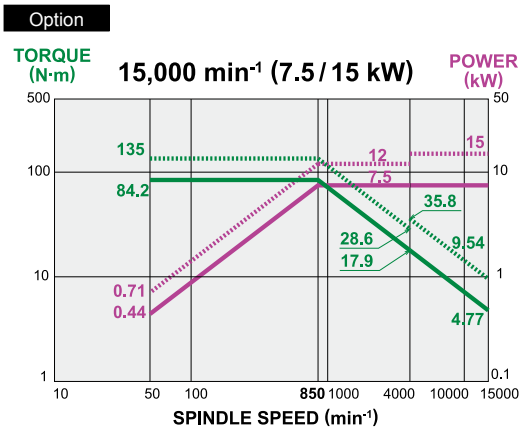

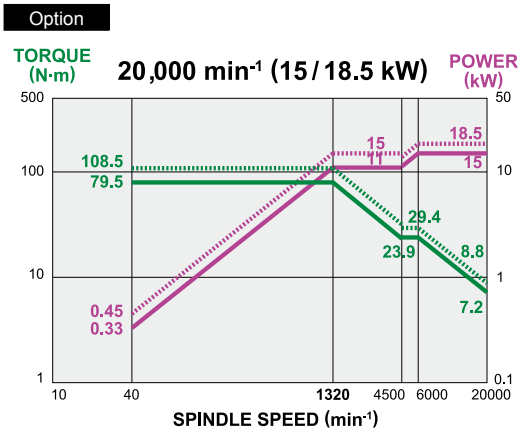

		Facemill	Endmill	Dril	Tap
		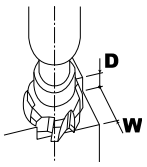	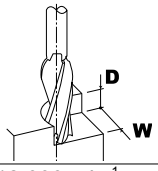	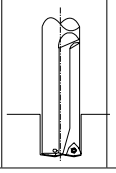	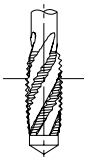
CUTTING PERFORMANCE 12,000 min^{-1} 7.5/11 kW					
A5052		ø80mm 3 teeth carbide (W70mm, D4mm)	ø25mm 2 teeth carbide (W15mm, D3mm)	ø33mm	M24xP3.0
	1	6,000	12,000	1,200	100
	2	5,500	12,000	500	450
	3	**1,540**	**1,440**	**427**	
S45C		ø80 5 teeth carbide (W70mm, D3mm)	ø20 4 teeth carbide (W3mm, D30mm)	ø30mm	M24xP3.0
	1	850	6,000	850	80
	2	2,100	4,500	260	240
	3	**441**	**405**	**184**	
CUTTING PERFORMANCE 20,000 min^{-1} 15/18.5 kW					
A5052		ø80mm 3 teeth carbide (W70mm, D4mm)	ø25mm 2 teeth carbide (W20mm, D6mm)	ø30mm	M30xP3.5
	1	6,000	20,000	1,800	120
	2	8,000	15,000	700	420
	3	**2,240**	**1,800**	**495**	
S45C		ø80mm 5 teeth carbide (W70mm, D2mm)	ø20mm 4 teeth carbide (W3mm, D30mm)	ø27mm	M24xP3.0
	1	1,320	6,000	1,500	100
	2	2,800	6,000	320	300
	3	**392**	**540**	**183**	
1:Spindle Speed (min^{-1}) 2:Feedrate (mm/min) 3:Quantity (cc/min)					

Flexible Tool Magazine

Fast Tool Change

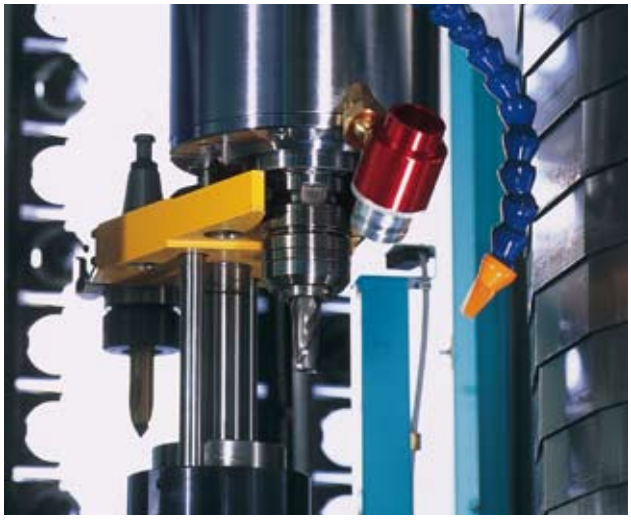

• Maximum productivity calls for minimum idle or non-cutting time. With a 0.5 second tool change, coupled with a rapid traverse rate of 40 m/min (1,574 ipm) in the X,Y,Z axes, the ***MAM72-3VS/35V*** machine is at the 'top of the class' in this respect.

Tool to Tool	0.56 sec.
Chip to Chip	5.60 sec.

• Equally as important as speed, however, is reliability. This is where Matsuura's as 'simple as possible' design philosophy really pays dividends. The tool change is actuated by a simple, yet ingenious motor driven cam driven mechanism which has proven to give absolute reliability.

Expandable Tool Magazine

• Long hours of unmanned running, machining a wide variety and type of components, typically requires a comprehensive selection of tooling, with sister tooling normally called for. With 120 stations as standard, the ***MAM72-3VS/35V*** machine amply satisfies this requirement.

• But by virtue of Matsuura's unique tool magazine cassette system, the number of tool storage locations can be expanded in steps of 30, up to a maximum of 240 - at any time in the future.

• The ATC Controller employs a touch screen, allowing for easier operation.

Tool Storage Capacity	Standard	120 tools
Tool Storage Capacity	Option	150 / 180 / 210 / 240 tools

ATC Controller

Max. Tool Diameter : 80 mm (3.14 in.)
[When both pockets are empty : 150 mm (5.90in.)]

Max. Tool Weight : 8 kg (17 lb)

Easy Maintenance

Tool Management

• All aspects of tool management can be controlled on screen with easy to use, status at a glance technology.

ATC Trouble Shooting

• On screen graphics clearly informs the user of the ATC's condition, position & motion during recovery.

High Density Storage

Matsuura Unique Pallet Storage System

- In developing the ***MAM72-3VS/35V*** machine, the capability to satisfy individual customer requirements was high among the design criteria.
- Hence features such as the choice of four different spindle speeds; a tool storage system that can be expanded up to 240 tools, and a choice of pallet storage capacity. Extensive unmanned running capability is thereby assured.
- Pallets are transferred between the intermediate transfer stations, storage positions and work table by a central 'pick' n place' robot. Transfer time of the 130 mm (5.11 in.) diameter pallets is just 25 seconds.

APC Work Station

APC Controller

Pallet Storage Management

- On the pallet monitor screen, you can call the pallet details screen, and check and edit the data per pallet.

APC Trouble Shooting

- On screen graphics clearly informs the user of the APC's condition, position & motion during recovery.

- Operator workstation with rotatable platen for ease of loading.

Machine Name	No. of Pallets	Max. Work Size	Max. Work Weight
MAM72-3VS	40	Ø300 x *H250 mm (Ø11.81 x H9.84 in.)	60 kg (132 lb.)
MAM72-35V	32	Ø350 x *H240 mm (Ø11.81 x H9.84 in.)	60 kg (132 lb.)

*In case of storing the pallets on the top stacker, workpieces of H315mm are acceptable.

180 Pallets & Tools for Maximum Production Capacity

5-Axis Vertical Machining Center

MAM72-3VM

Max.Work Size	mm (in.)	ø300※ x H250 (ø11.81 x H9.84)
Travel (X/Y/Z)	mm (in.)	680 / 400 / 625 (26.77 / 15.74 / 24.60)
Travel (B/C)	deg	+65 ~ -110 / 360
Spindle Speed	min^{-1}	12,000 : BT40
Rapid Traverse (X/Y/Z)	mm/min (ipm)	40,000 (1,574.8)
Rapid Traverse (B/C)	min^{-1}	25 / 50
Number of Pallets	pcs	90 or 180

※With conditions

(PC180)

Pallet IC System Standard

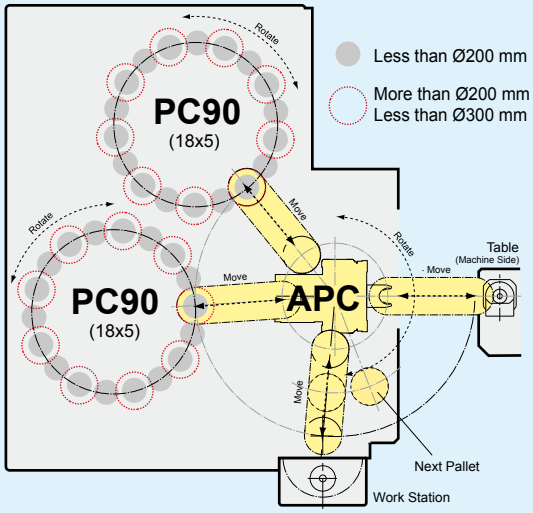

- Key to the economic and effective management of pallets in multi-machine installations is the Pallet IC system which utilises an IC memory chip in the pallet base.
- This chip stores the pallet number, work size (Large or Long or Standard), thus ensuring the total reliability of pallet transfer between machines.

Cell Manager

Standard

- The Matsuura developed Cell Control Application "CELL MANAGER", has been specially designed for highly efficient operational time management.
- Windows NT4.0 / 2000 / XP Compatible. System monitoring & data management is easily achieved from a networked PC. All CAD/CAM data & NC Programs can all be managed together.
- Program required for processing is sent at the same time as the relevant pallet. Other processing schedules made on other PC's can also be shown.
- Machine operational time can easily be seen on a graph.
- Using the remote function (optional), you can monitor the machine, change schedule, and verify actual production figures via dial up connected PC from home.

System Monitor

- It shows the situation of work station, work transfer, and work stacker (Number of pallets and programs) visibly.

Pallet Schedule Management

- If an extremely urgent job arises, the pallet schedule can be interrupted and the new job located into the machine as the most urgent workpiece.

NC Program Manager

- As NC programs can be stored to HDD of Cell Manager, it is easy for operator to manage.

Alarm Manager

- It shows the details of alarm message.

The Latest High Performance Nc System

Optimized Functions for High Speed Machining

Matsuura G-Tech 30i

- High speed CPU and FSSB, internal CNC bus, optical fiber cables used for high speed data transfer.
- Nanometer resolution.
- 10.4 inch color LCD, soft keys vertically arranged, Compact Flash Port, PC file management structure.

Machining for General Parts or Mold & Die
Standard *IZ-1/15F*

Machining for more Complex, Precision Parts
Option *IZ-1/30NF, IZ-2/150NF*
(Look Ahead Linear Ace./dec.+nano interpolation)

- Executing the maximum 200 (IZ-1/30NF) or 600* (IZ-2/150NF) -block look ahead linear acc./dec. before interpolation achieves a smooth acc./dec. across the multiple blocks calculated by nano order.

*max.1,000 block available as option.

Automatically Controlled Toolpath / Tool Speed Option

- Tool Center Point Control (TCPC)
  Tool center point moves according to the program command with table tilt/rotation.

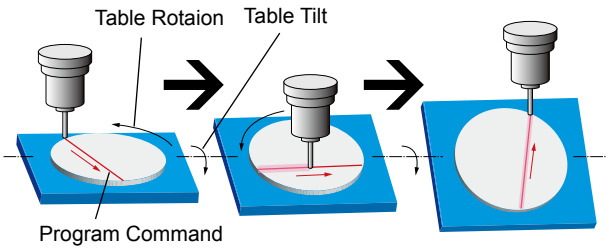

Tool center point moves according to the program command with table tilt/rotation.

Easy Programming (3+2-Axis) Option

- Tilted working plane command which takes over necessary calculations fo coordinate values including necessary axes motions. When rotary axes are moved, rather complex calculations, in the with machnine axes configuration, should be made for re-calculating and establishing suitable work coordinate system for the new surface & iths orientation.

Tool Diameter Offset for 5-Axis

Option

- 3-dimensional cutter compensation sets the value of tool-off-sets automatically for simultaneous 5-Axis machining according to the pre-set value. It enables the safe & automatic use of different diameter tools during 5-Axis machining with the table tilted.

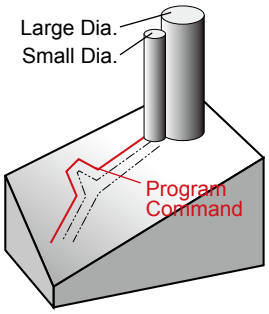

High-Speed Precision Machining Program Support Function

IPC (Adjustment Function for High Speed /Accuracy Marching)

- For high speed cutting applications, Matsuura's proven and pioneering software is recommended. When utilizing this software, setting the required part accuracy level is quick, simple and user friendly, allowing you to prioritize precision against speed.

AD-TAP

- Matsuura's unique spindle motor control technology-AD-TAP, intelligently optimizes the torque V speed characteristics of the spindle motor, depending on the size of the tap used. This provides average reduction of 20% in tapping time. (Patented)

Operator Support Software

MIMS *Matsuura Intelligent Meister System* Standard

Reliability Meister
Machine Down Time Reduction
- Preventive maintenance support functions
- Machine restoration support functions

Operability Meister
Fuss-Free Simple Operation
- Tool setup support
- Part setup support
- Restart after machining stop

Stable Accuracy
- Spindle thermal displacement compensation
- Feed Axis Thermal Displacement Compensation
- Environment Thermal Displacement Compensation

Thermal Meister

Power Saving
- Power cut-off function
- Energy-saving devices installed

Power Saving

Reliability Meister Plus — Increased Security Provided Option
「Electronic manual」「E-mailing functio」

※Reliability Meister Plus requires a PC.
Consult Matsuura for more information.

Intelligent Protection System
Option

Ultra Safe Collision Protection

Safe & Secure

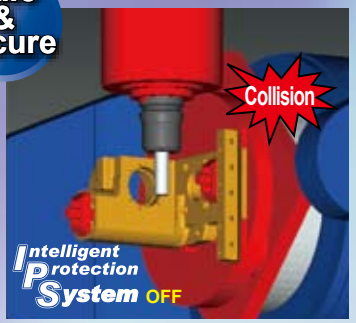

Manual / automatic operation supported
Simultaneous 5-axis machining supported

※With Intelligent Protection System, interference check is available during cutting simulation.

On-Line Link with PC

External PC — Machining Center

※***Intelligent Protection System*** simulates your programmed component alerting the user to any interference or collision before any actual machining.
※Requires end user PC - consult Matsuura for full specifications.

Wide-Ranging Applications... One-Offs to Multi-Part Sets

Workpiece	Parts for Aircraft
Material	A7075
Number of Tools	8
Process	1
Cycle Times	110 minutes

Workpiece	Gear Box
Material	16MnCr05
Number of Tools	16
Process	1
Cycle Times	33 minutes

Workpiece	Space Craft Parts
Material	A7075
Number of Tools	14
Process	1
Cycle Times	45 minutes

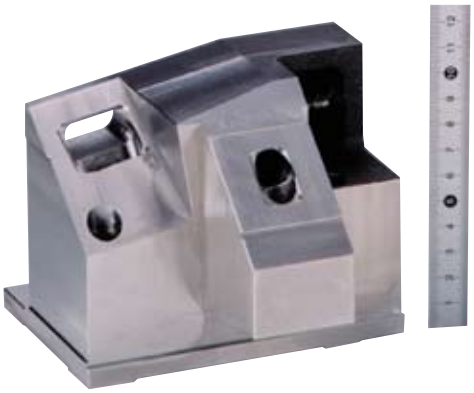

Workpiece	Optiacl Instrument
Material	Nicke; Alloy
Number of Tools	22
Process	1
Cycle Times	1 hour 5 minutes

Workpiece	Parts for Aircraft
Material	A7075
Number of Tools	15
Process	1
Cycle Times	50 minutes

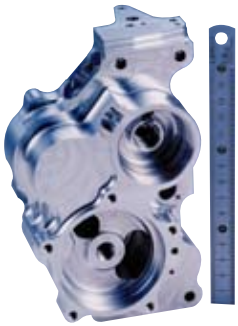

Workpiece	Valve Body
Material	A7075
Number of Tools	63
Process	1
Cycle Times	1 hour 50 minutes

Workpiece	Screw
Material	A7075
Number of Tools	15
Process	1
Cycle Times	3 hours 15 minutes

Workpiece	Mebius Ring
Material	A7075
Number of Tools	10
Process	2
Cycle Times	45 minutes

Workpiece	U-Drill
Material	SAE4340(HRC50)
Number of Tools	16
Process	1
Cycle Time	1 hour 30 minutes

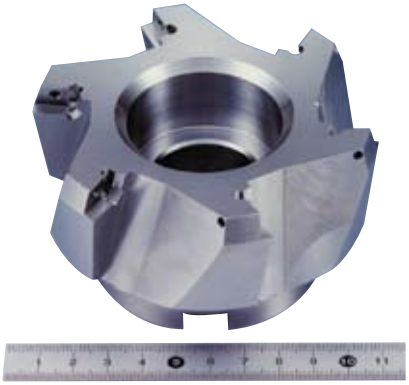

Workpiece	Facemill Body
Material	S45C
Number of Tools	5
Process	1
Cycle Times	20 minutes

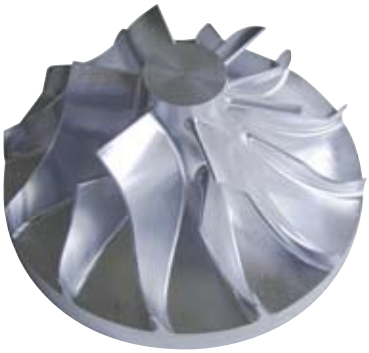

Workpiece	Impeller
Material	A7075
Number of Tools	5
Process	1
Cycle Times	1 hour 10 minutes

Workpiece	Endmill Body
Material	SCM435
Number of Tools	18
Process	1
Cycle Times	1 hour 10 minutes

Post Processor **CAMplete TRUEPATH** Option

CAMplete TruePath provides everything you need to analyze, edit, optimize and verify 5-axis toolpaths in a seamless 5 view 3D environment. Take control of your post processing and reap the venefits from your Matsuura 5-axis machine.

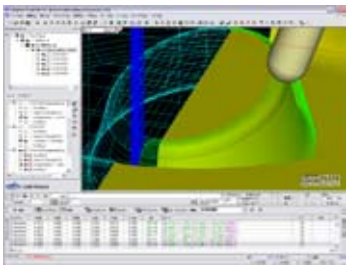

CAMPLETE TRUEPATH
Matsuura 5-axis Solutions

Movement and Ranges

	MAM72-3VS	MAM72-35V
X-Axis Travel	680 mm (26.77 in.)	
Y-Axis Travel	400 mm (15.74 in.)	385 mm (15.15 in.)
Z-Axis Travel	625 mm (24.6 in.)	
B-Axis Travel	+65～-110 deg	+65～-106 deg
C-Axis Travel	360 deg	

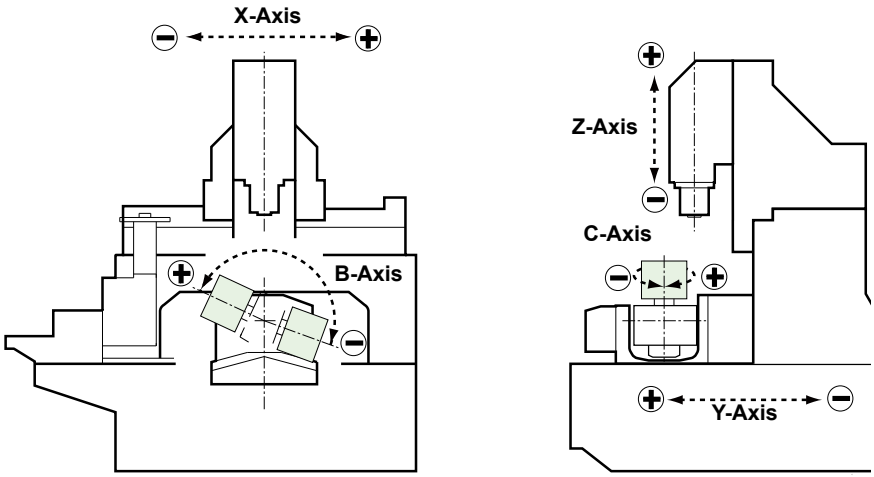

Work Interface

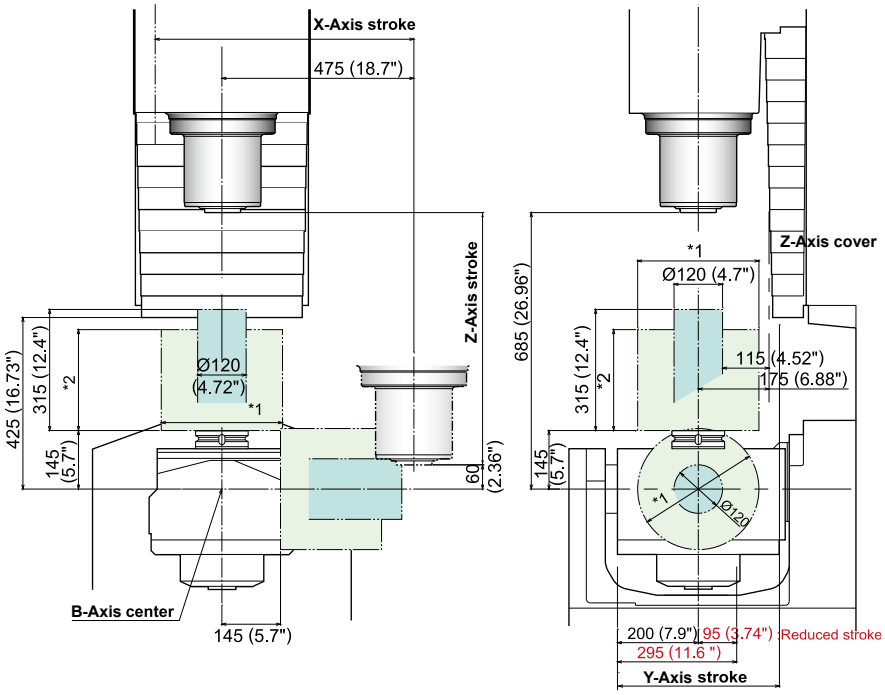

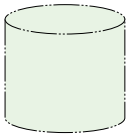

MAX. WORK SIZE		
	MAM72-3VS	MAM72-35V
*1 :Diameter	Ø300 mm (11.81 in.)	Ø350 (13.77 in.)
*2 :Height	H250 (9.84 in.)	H240 (9.44 in.)

LONG WORK SIZE EXAMPLE

In case of Ø120 mm(4.7 in.) x H315 mm (12.4 in.) work,Y-axis stroke is 295 mm (11.6 in.).
In case of machining with B-axis set only at -90°, there is no limit to Y-axis stroke,
but when moving B axis to 0°, Y axis must be at reference point.

Work & Interface Movement & Ranges

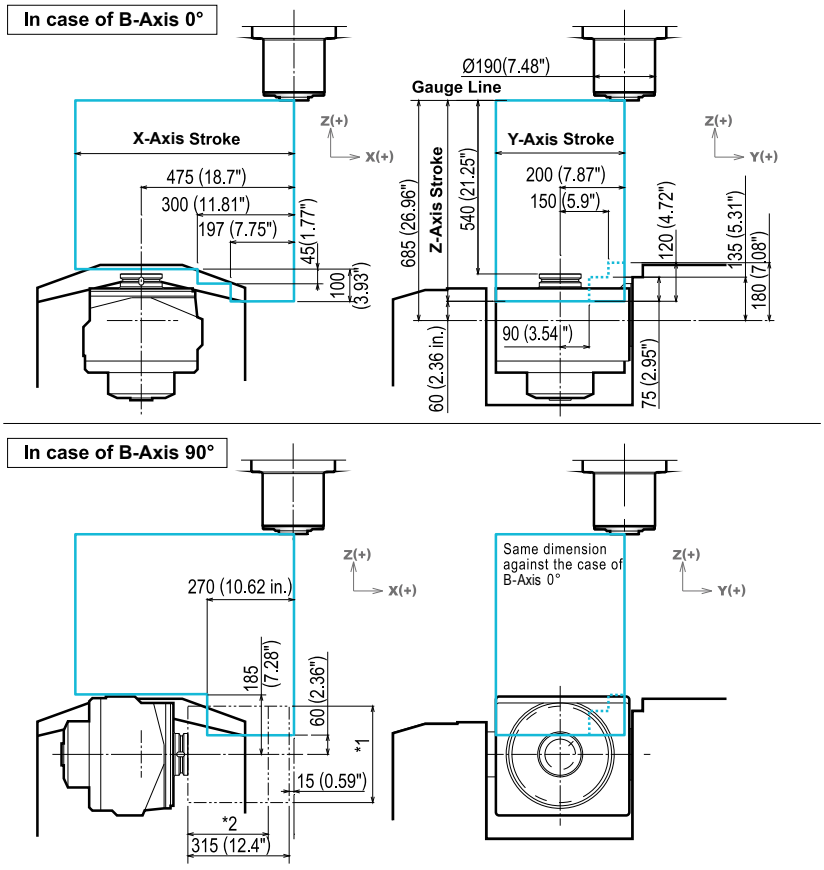

MAX. WORK SIZE		
	MAM72-3VS	MAM72-35V
*1 :Diameter	Ø300 mm (11.81 in.)	Ø350 (13.77 in.)
*2 :Height	H250 (9.84 in.)	H240 (9.44 in.)

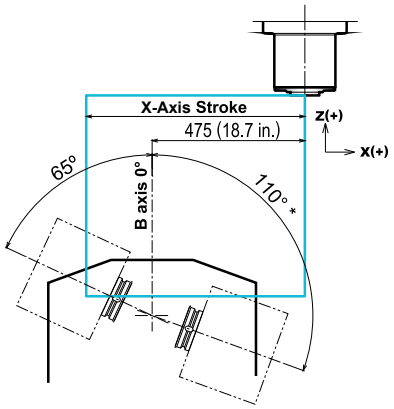

*106° : in case of MAM72-35V

Pallet Surface

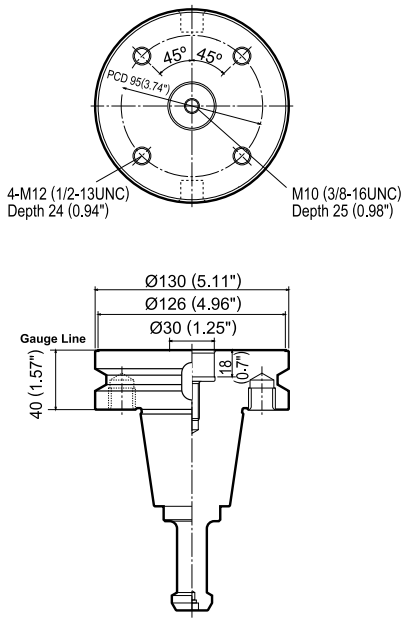

Tailstock (option) Interface

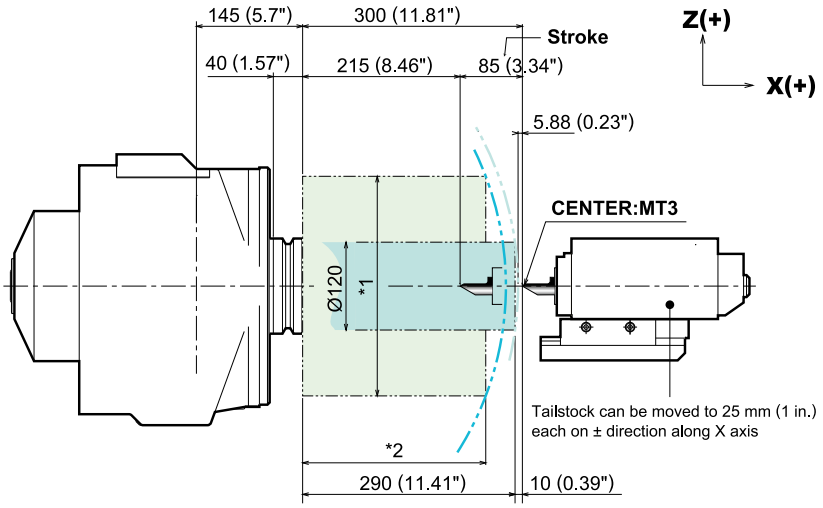

MAX. WORK SIZE		
	MAM72-3VS	MAM72-35V
*1 :Diameter	Ø300 mm (11.81 in.)	Ø350 (13.77 in.)
*2 :Height	H250 (9.84 in.)	H240 (9.44 in.)

MAM72-3VS : Floor Plan & Outline

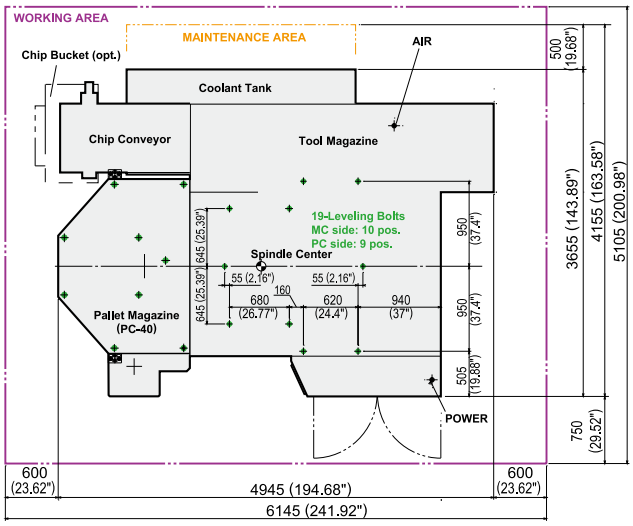

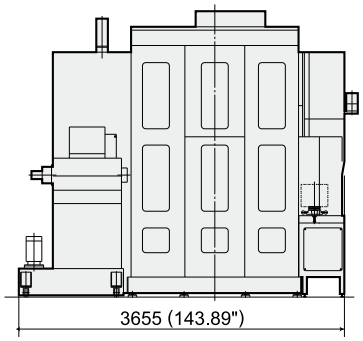

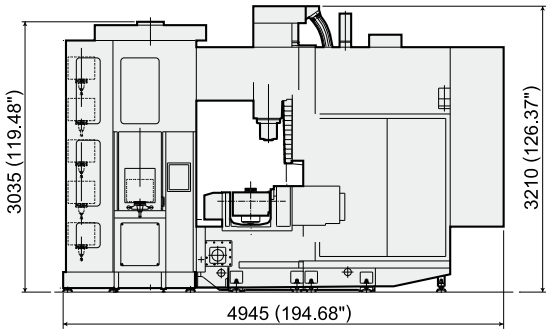

MAM72-35V : Floor Plan & Outline

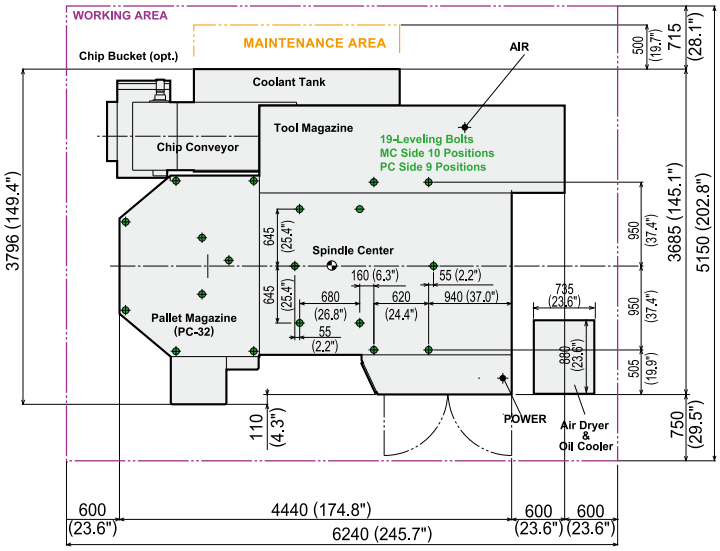

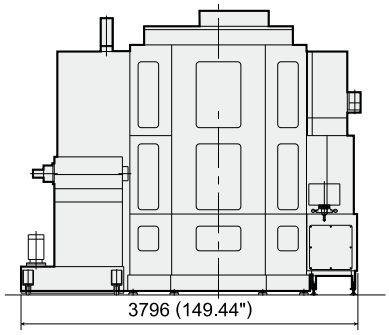

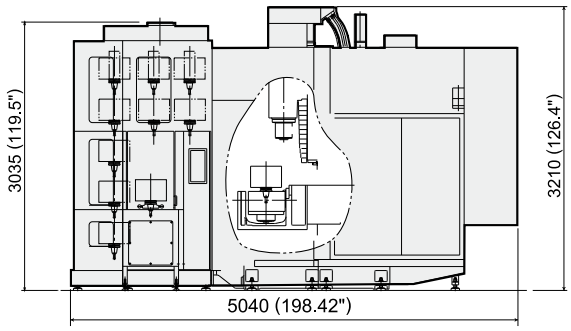

MAM72-3VM : Floor Plan & Outline

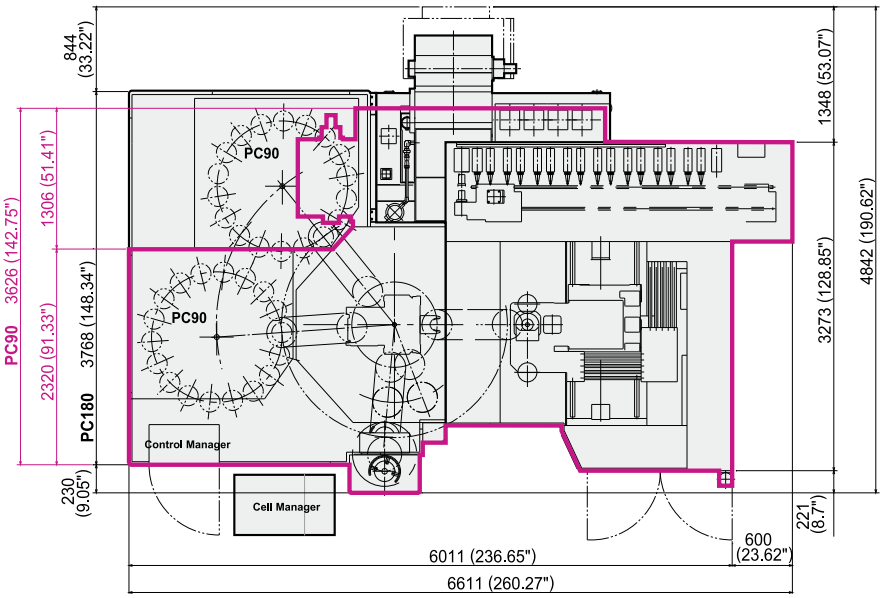

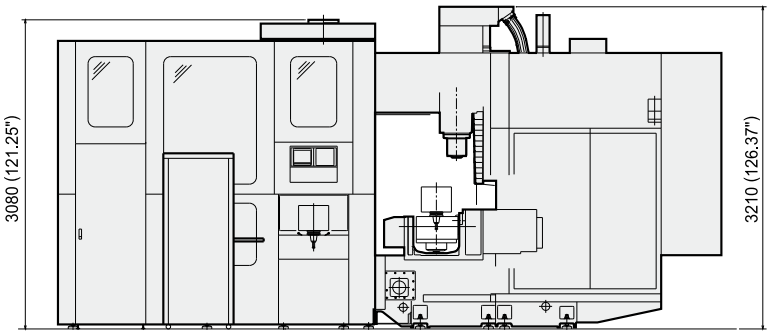

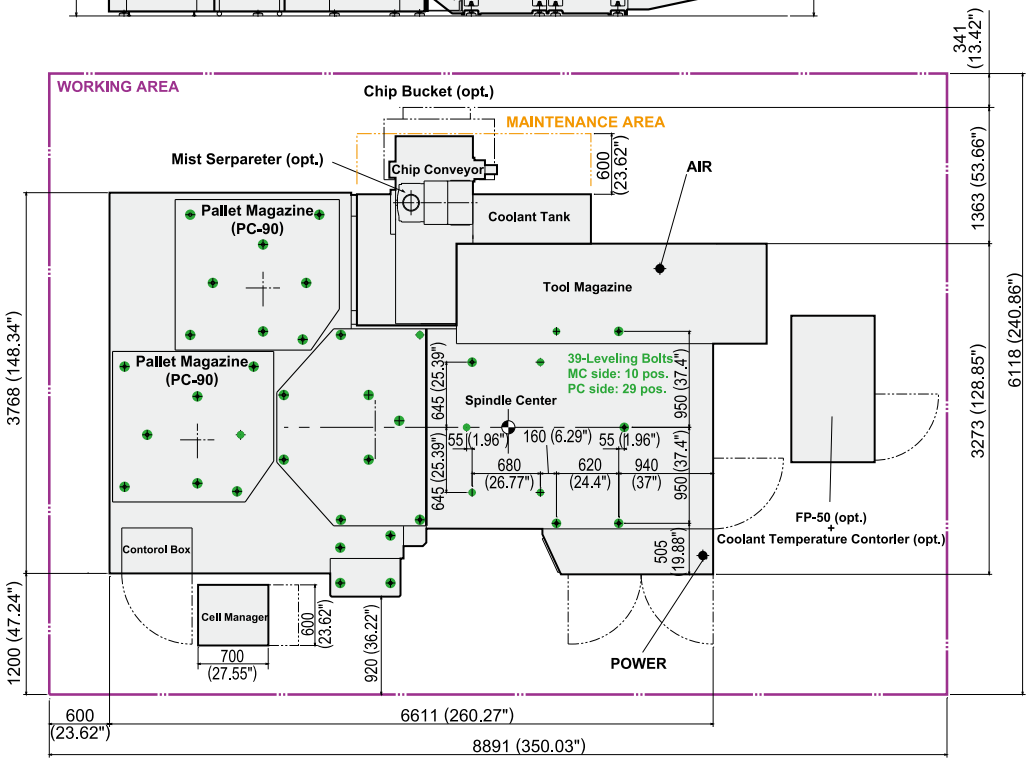

Standard Machine Specifications

		MAM72-3VS	MAM72-35V	MAM72-3VM
■ Movement and Ranges				
X-Axis Travel	mm (in.)	680 (26.77)	680 (26.77)	680 (26.77)
Y-Axis Travel	mm (in.)	400 (15.74)	385 (15.15)	400 (15.74)
Z-Axis Travel	mm (in.)	625 (24.60)	625 (24.60)	625 (24.60)
B-Axis Travel	deg	+65 ~ -110	+65 ~ -106	+65 ~ -110
C-Axis Travel	deg	360	360	360
From Pallet Surface To Indle Gauge Line	mm (in.)	-85 ~ 540 (-3.34 - 21.25)	-85 ~ 540 (-3.34 - 21.25)	-85 ~ 540 (-3.34 - 21.25)
Pallet Center To Spindle Gauge Line	mm (in.)	60 ~ 685 (2.36-29.96)	60 ~ 685 (2.36-29.96)	60 ~ 685 (2.36-29.96)
■ Pallet				
Working Surface	mm (in.)	ø130 (ø5.12)	ø130 (ø5.12)	ø130 (ø5.12)
Surface Configuration		M12 tapped holex4	M12 tapped holex4	M12 tapped holex4
Loading Capacity	kg (lb.)	60 (132)	60 (132)	60 (132) Max. work weight on the pallet magazine (PC90) is altogether 2,520 kg. Average work weight per one pallet is 28 kg.
Max. Work Envelope	mm (in.)	ø300 x H250 (ø11.81 x H9.84 in.) In case of storing the pallets on the top stacker, workpieces of H315mm are acceptable.	ø350 x H240 (ø13.77 x H9.44 in.) In case of storing the pallets on the top stacker, workpieces of H315mm are acceptable.	ø200 x H250 (ø7.87 x H9.84 in.) If the neighbours addresses in pallet stacker are empty, ø300mm work can be mounted. In case of storing the pallets on the top stacker, workpieces of H315mm are acceptable.
Indexing Angle (B/C)	deg	0.001	0.001	0.001
B Axis Indexing Time (90º)	sec.	1.46 sec. (without pallet clamping/ unclamping time : 0.68 sec.)	1.46 sec. (without pallet clamping/ unclamping time : 0.68 sec.)	1.46 sec. (without pallet clamping/ unclamping time : 0.68 sec.)
C Axis Indexing Time (180º)	sec.	1.47 sec. (without pallet clamping/ unclamping time : 0.69 sec.)	1.47 sec. (without pallet clamping/ unclamping time : 0.69 sec.)	1.47 sec. (without pallet clamping/ unclamping time : 0.69 sec.)
■ Spindle				
Spindle Speed Range	min^{-1}	40 ~ 12,000	40 ~ 12,000	40 ~ 12,000
Spindle Taper		7/24 taper BT40 (Double Contact type)	7/24 taper BT40 (Double Contact type)	7/24 taper BT40 (Double Contact type)
Spindle Bearing Inner Diameter	mm (in.)	ø80 (ø3.14)	ø80 (ø3.14)	ø80 (ø3.14)
Spindle Bearing Lubrication		Grease	Grease	Grease
Spindle Motor Power	kW (HP)	7.5 / 11 (15)	7.5 / 11 (15)	7.5 / 11 (15)
Max. Spindle Torque	Nm/min^{-1}	167 / 630	167 / 630	167 / 630
■ Feedrate				
Rapid Traverse Rate (X/Y/Z)	mm/min (ipm)	60,000 / 60,000 / 50,000 (2,362.2 / 2,362.2 / 1,968.5)	60,000 / 60,000 / 50,000 (2,362.2 / 2,362.2 / 1,968.5)	40,000 / 40,000 / 40,000 (1,574.8 / 1,574.8 / 1,574.8)
Rapid Traverse Rate (B/C)	min^{-1}	25 / 50	25 / 50	25 / 50
Feedrate (X/Y/Z)	mm/min (ipm)	1 ~ 40,000 (0.03 - 1,574.8)	1 ~ 40,000 (0.03 - 1,574.8)	1 ~ 40,000 (0.03 - 1,574.8)
Feedrate (B/C)	deg / min	1 ~ 9,000 / 1 ~ 18,000	1 ~ 9,000 / 1 ~ 18,000	1 ~ 9,000 / 1 ~ 18,000
■ Automatic Tool Changer				
Type of Tool Shank		JIS B 6339 tool shank 40T	JIS B 6339 tool shank 40T	JIS B 6339 tool shank 40T
Type of Retention Knob		JIS B 6339 pullstud 40P	JIS B 6339 pullstud 40P	JIS B 6339 pullstud 40P
Tool Storage Capacity	pcs.	120 (240 tool Base)	120 (240 tool Base)	120 (240 tool Base)
Max. Tool Diameter	mm (in.)	ø80 (ø3.14)	ø80 (ø3.14)	ø80 (ø3.14)
(When the pockets on both sides are empty)	mm (in.)	ø150 (ø5.9)	ø150 (ø5.9)	ø150 (ø5.9)
Max. Tool Length	mm (in.)	260 (10.23)	260 (10.23)	260 (10.23)
Max. Tool Weight	kg (lb.)	8 (17.0)	8 (17.0)	8 (17.0)
Tool Changing Time : Tool to Tool	sec.	0.56	0.56	0.56
Tool Changing Time : Chip to Chip	sec.	5.6	5.6	5.6
■ Automatic Pallet Changer				
Number of Pallet		40	32	90 or 180
Pallet Changing Time	sec.	24	24	24
■ Power Supply				
Input Power	kVA	53	53	59
Voltage	V	AC200/220V ± 10%	AC200/220V ± 10%	AC200/220V ± 10%
Frequency	Hz	50 / 60 ± 1	50 / 60 ± 1	50 / 60 ± 1
Air Source	MPa	0.51 ~ 0.82	0.51 ~ 0.82	0.51 ~ 0.82
Required Air Volume	NL/min	600	600	600
■ Tank Capacity				
Coolant Tank Capacity	L	600	600	600

Standard Accessories

01. Total Splash Guard
02. Pallet Loading Station
03. Safety Guard for Loading Station
04. Spindle Air Blow for Chip Swarf Removal
05. Synchronized Tapping Function
06. ***AD-TAP*** Function
07. ***IPC*** Function
08. Spindle Oil Cooler
09. Coolant System (Chip Flush System, Drum Filter with Lift-up Chip Conveyor)
10. Spindle Overload Protect Fubction
11. M-Code Counter/9 Sorts of M Function
12. ***MIMS (MAM72-3VS, MAM72-35V)***
13. Work Light
14. Tools and Tool Box
15. Machine Color Paint
16. Levelling Screw and Pads
17. Z-axis HEIDENHAIN Scale Feed Back
18. Scale Feedback B/C-axes
19. ***Handy Man ⅡF (MAM72-3VM)***
20. CD-ROM for Memory Card Operation (only for ***Matsuura G-Tech 30i***)
21. Matsuura Safety Specification

Options

■ Spindle Speed

- 8,000 min^{-1}
- 15,000 min^{-1}
- 20,000 min^{-1}

■ Coolant Thru Spindle System

- 2MPa (290 psi)
- FP-50 (725 psi)
- FP-70 (1,015 psi)
- External Nozzle 2 MPa
- External Nozzle 7 MPa

■ Number of Tools : Matrix Type

- 150
- 180
- 210
- 240

■ High Accuracy Control

- Scale Feedback System XY-Axis
- Tail Stock
- Spindle Thermal Displacement Compensation

■ In-Process Measurement / Broken Tool Detection

- In-Process Measurement / Auto Centerring (Touch Probe)
- Broken Tool Detection / Auto Tool Length (Touch Sensor)
- Broken Tool Detection / Auto Tool Length (Laser Sensor)
- In-Process Measurement (Touch Probe)+Broken Tool Detection (Touch Sensor)
- In-Process Measurement (Touch Probe)+Broken Tool Detection (Laser Sensor)

■ Swarf Management

- Semi-Dry Unit
- Coolant Flow Checker
- Spiral Chip Conveyor
- Lift-up Chip Conveyor (Hinge Type + Sprial Chip Conveyor)
- Chip Bucket
- Mist Separator Unit

■ Operation Assistance

- 2nd Pallet Loading Station
- Tailstock
- Weekly Timer
- 3 Color Status Light (Red - Green - Yellow)
- Spindle Run Hour Meter
- Automatic Operation Run Hour Display Unit
- Movable Manual Pulse Generator
- Mist Separator Unit
- Rotary Wiper (Air Supply System)
- ***Intelligent Protection System***